THIS DRAWING IS THE PROPERTY OF ANALOG DEVICES INC. IT IS NOT TO BE REPRODUCED OR COPIED, IN WHOLE OR IN PART, OR USED IN FURNISHING INFORMATION TO OTHERS, OR FOR ANY OTHER PURPOSE DETRIMENTAL TO THE INTERESTS OF ANALOG DEVICES.
THE EQUIPMENT SHOWN HEREON MAY BE PROTECTED BY PATENTS OWNED OR CONTROLLED BY ANALOG DEVICES.

RELAY CONTROL CHART

CONTROL	CODE	DEVICE	FUNCTION	CONNECTOR

JUMPER TABLE

JP#	ON	OFF
1		
2		
3		
4		
5		

* SEE ASSEMBLY INSTRUCTIONS

REVISIONS

REV	DESCRIPTION	DATE	APPROVED
A	INITIAL RELEASE	24MAY21	A. CATAPANG
B	CHANGES AS PER ECR-113045	21FEB23	M. SO

EVAL-CN0565-ARDZ
ELECTRICAL IMPEDANCE PLATFORM

P.O SPEC.	BK/BD SPEC.	SOCKET OEM	OEM PART#	HANDLER

TEMPLATE ENGINEER -	DATE	
HARDWARE SERVICES M. VALE	24MAY21	
HARDWARE SYSTEMS -		
TEST ENGINEER -		
COMPONENT ENGINEER M. YAN	24MAY21	
TEST PROCESS -		
HARDWARE RELEASE K. JABATAN	24MAY21	
DESIGNER K. MOYO	24MAY21	
PTD ENGINEER A. CATAPANG	24MAY21	
CHECKER -		

SCHEMATIC

ANALOG DEVICES

HW TYPE : Customer Evaluation Z
Product(s): AD5940
: ADG2128
PACKAGE : LeadCount-lead BodySize PackageType-family
: Pitch-pitch StyleVendor Style

<User Define>
<User Define>
<User Define>

MASTER PROJECT TEMPLATE: TBD
TESTER TEMPLATE: no_template

UNLESS OTHERWISE SPECIFIED DIMENSIONS ARE IN INCHES
TOLERANCES
DECIMALS X.XX +-0.010 X.XXX +-0.005
FRACTIONS +-1/32
ANGLES +-2

DRAWING NO. 02_066534
REV. B

SIZE D | SCALE 1:1 | CODE ID NO. CodeID | SHEET 1 OF 3

REVISIONS			
REV	DESCRIPTION	DATE	APPROVED

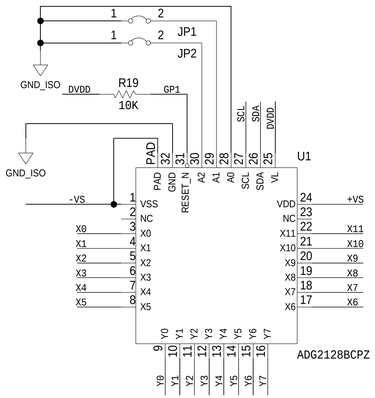

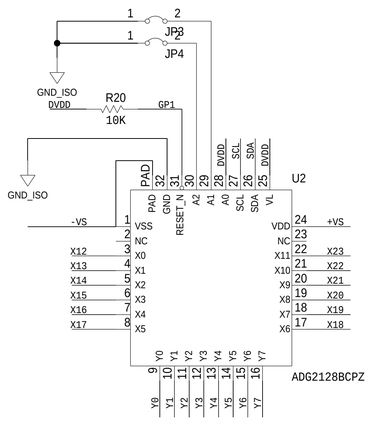

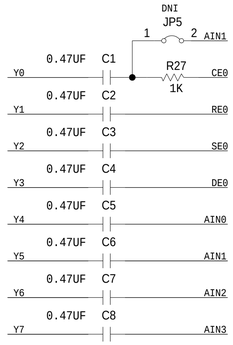

COUPLING

EXTERNAL OSCILLATOR

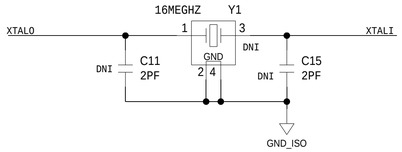

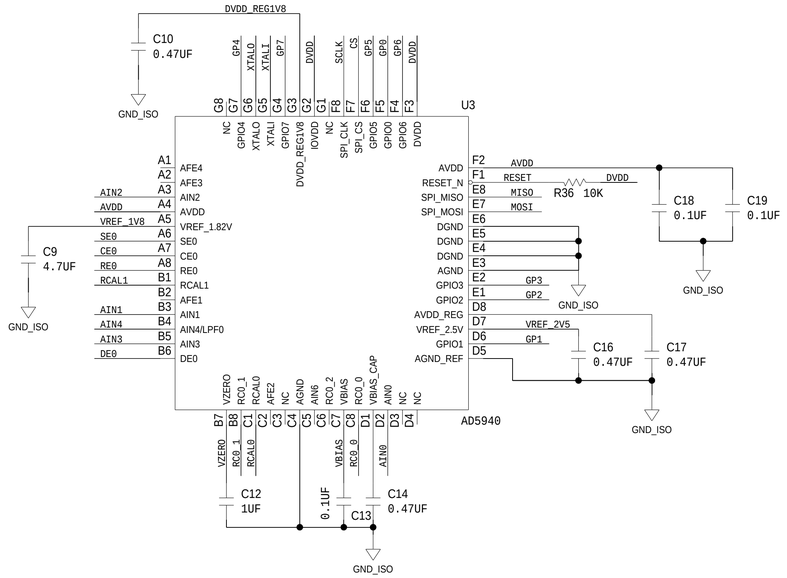

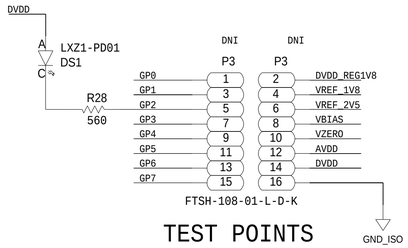

TEST POINTS

100-MIL ELECTRODE CONNECTOR

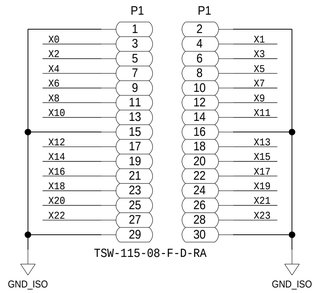

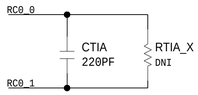

TIA FILTER

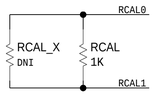

CALIBRATION

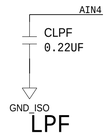

LPF

ANALOG DEVICES	SCHEMATIC		
	HW TYPE : Customer Evaluation Z Product(s): AD5940 : ADG2128		
THIS DRAWING IS THE PROPERTY OF ANALOG DEVICES INC. IT IS NOT TO BE REPRODUCED OR COPIED, IN WHOLE OR IN PART, OR USED IN FURNISHING INFORMATION TO OTHERS, OR FOR ANY OTHER PURPOSE DETRIMENTAL TO THE INTERESTS OF ANALOG DEVICES. THE EQUIPMENT SHOWN HEREON MAY BE PROTECTED BY PATENTS OWNED OR CONTROLLED BY OWNED ANALOG DEVICES.	DESIGN VIEW <DESIGN_VIEW>	DRAWING NO. 02_066534	REV B
	PTD ENGINEER A. CATAPANG	SIZE D / SCALE 1:1	SHEET 2 OF 3

REVISIONS			
REV	DESCRIPTION	DATE	APPROVED

ARDUINO CONNECTOR

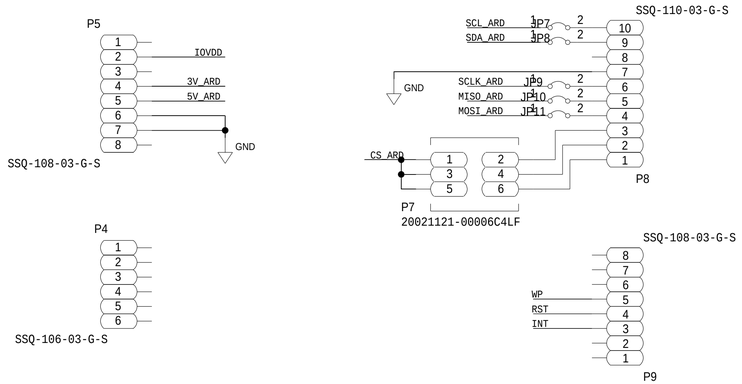

EEPROM

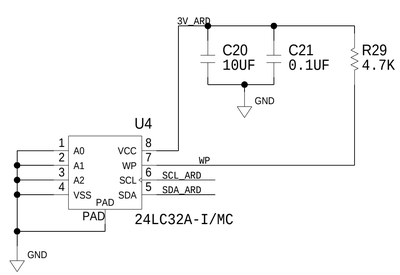

POWER

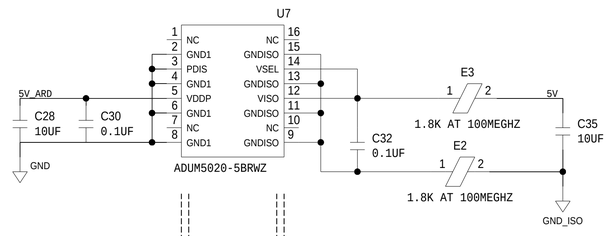

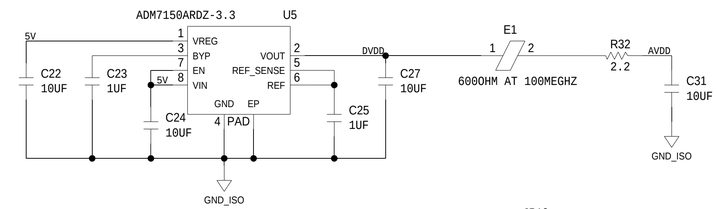

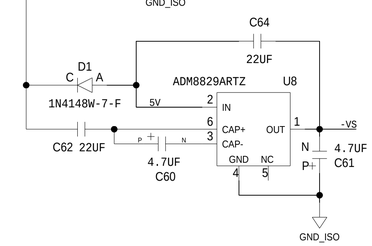

SPI/I2C ISOLATOR

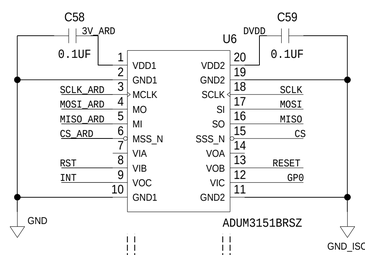

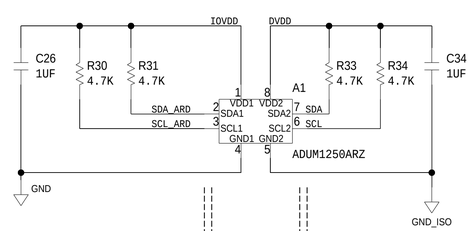

PROCESSOR SIDE

ISOLATED SIDE

ANALOG DEVICES

THIS DRAWING IS THE PROPERTY OF ANALOG DEVICES INC.
IT IS NOT TO BE REPRODUCED OR COPIED, IN WHOLE OR
IN PART, OR USED IN FURNISHING INFORMATION TO OTHERS,
OR FOR ANY OTHER PURPOSE DETRIMENTAL TO THE INTERESTS
OF ANALOG DEVICES.
THE EQUIPMENT SHOWN HEREON MAY BE PROTECTED BY PATENTS
OWNED OR CONTROLLED BY OWNED ANALOG DEVICES.

SCHEMATIC

HW TYPE : Customer Evaluation Z
Product(s): AD5940
: ADG2128

DESIGN VIEW	DRAWING NO.	REV
<DESIGN_VIEW>	02_066534	B

PTD ENGINEER	SIZE	SCALE	SHEET 3 OF 3
A. CATAPANG	D	1:1	